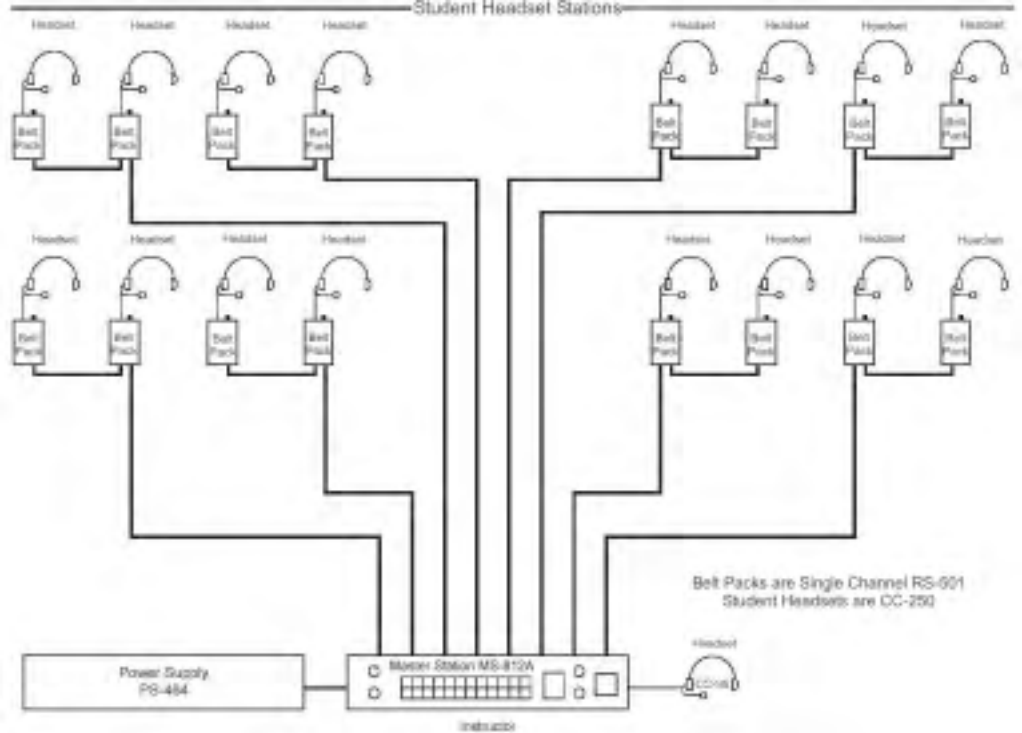
Student Headset Stations
Headset
Belt Pack
Belt Pack
Belt Pack